RoHS Compliant

*Due To Technical Progress, All The Information Provided Is Subject To Change Without Prior Notice.

Rev No	Revision note	Date	Signature	Checked
A/0	NEW DRAWING	DEC. 07. 2020		

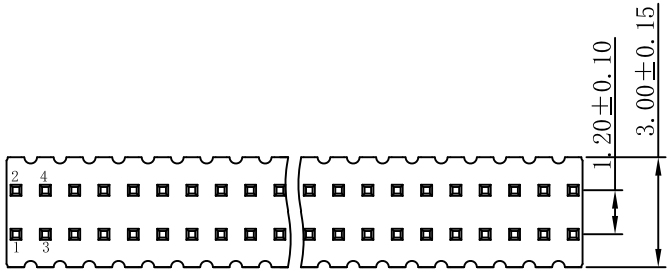

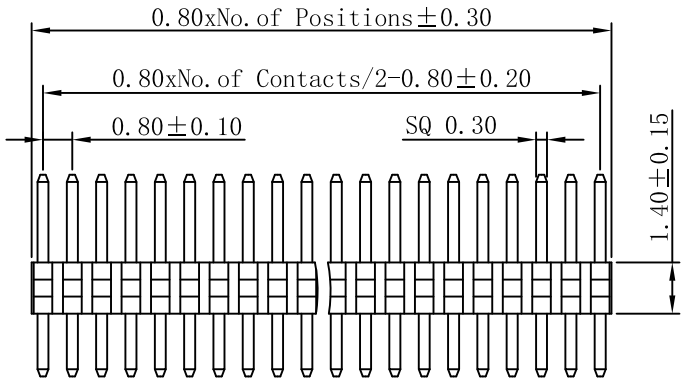

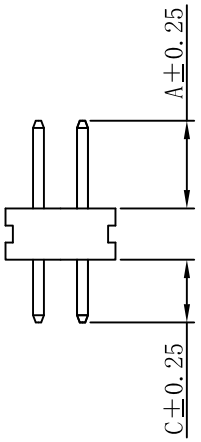

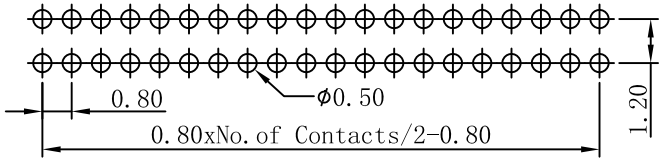

Recommended P.C.B Layout(Top Side)
(PCB BOARD TOLERANCE±0.05)

Electrical:

Current Rating:0.75AMP.
Contact Resistance:30mΩ Max.
Insulation Resistance:1000MΩ Min.
Withstanding Voltage:500V AC/DC.

Mechanical:

Contact Material:Brass(SQ 0.30mm).
Contact Plating:Au or Sn Over Ni.
Insulator Material:Polyester UL94V-0.
Standard:LCP+30%G.F.

Environmental:

Operating Temp Range:-55℃~+125℃ with Gold
-40℃~+105℃ with Tin
Max.Processing Temp:+230℃ for 30~60 Seconds
+260℃ for 10 Seconds

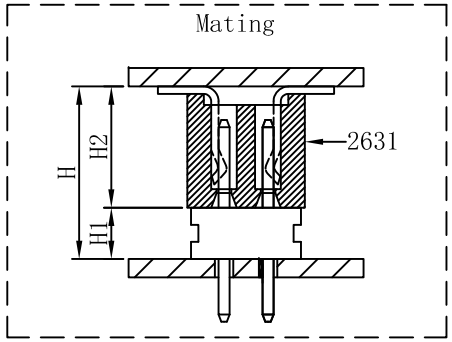

Ordering Code:

1614-12 XX S XX X XXX 0 X 01

- No. of Pins PerRow:02~50
- Contact Plating: G0=Gold Flash; G1=3u" Gold; G2=5u" Gold; G3=10U"Gold; G4=15U"Gold; G5=30U"Gold; S0=GoldFlash/Tin; SN=Tin; SM=Matte tin
- Insulator Material: A=BK-PBT; B=BK-PA6T; C=BK-PA9T; D=BK-LCP
- Pin Length: L=A+C+H
- Packing: T=Tube; P=Tube+CAP; R=Tape& Reel+CAP

Dimension Antitheses List			
ITEM	Pin Length	A	C
Standard	6.00	2.80	1.80
Alternate			

THIS DRAWING IS A CONTROLLED DOCUMENT

DIMENSIONS INCHES

TOLERANCES UNLESS OTHERWISE SPECIFIED

0 PLC	±	___
1 PLC	±	0.40
2 PLC	±	0.25
3 PLC	±	0.15
4 PLC	±	0.10
ANGLES		± 3°

DWN KAIXUAN.XU	DATE DEC. 07. 2020	
CHK MIKE	DATE DEC. 07. 2020	
APVD PETER	DATE DEC. 07. 2020	
UNITS MM	SCALE 5 : 1	SIZE A4
CAGE CODE 594309442	FILE PATH A/D/YTCOTZ/Pin Header/0.80x1.20mm	

YTCO TECHNOLOGY
HTTP://WWW.YTCO.CO

TITLE: PH0.80*1.20, DUAL ROW, S/T, H=1.4

PART NO. 1614-12XXSXXXXXX0X01

DRAWING NO. 1614-12S

SHEET 1 OF 1 REV A